USB JTAG and selection

File: USB_JTAG.kicad_sch

Frontend ports and power

File: Frontend_Power.kicad_sch

Mezzanine Connector 1

MC1
BTE-040-01-F-D-A

VIO1
DGND
+1.8V
B64_L5P
B64_L5N
B64_L6P
B64_L6N
B64_L3P
B64_L3N
B64_L7P
B64_L7N
B64_L4P
B64_L4N
B64_L1P
B64_L1N
B64_L2P
B64_L2N
B64_L8P
B64_L8N
DGND
DGND
B64_L20N
B64_L17P
B64_L17N
DGND
DGND
DGND
DGND
VIO2

Function: MC1 provides VIO, ground and eight stimulation pairs.
Source / changes: XEM8310 expansion connectors: unused I/O marked NC.
https://docs.opalkelly.com/xem8310/expansion-connectors/
VBATT, external VREF1 unused; NC.
Internal VREF setting still TBD.

Mezzanine Connector 2

MC2
BTE-040-01-F-D-A

+VDCIN
DGND
DGND
+VDCIN
DGND
DGND
DGND
DGND
DGND
VIO3
JTAG_TDO
DGND
VCCADC
GNDADC
VREFP
JTAG_TMS
JTAG_TDI
JTAG_TCK
DGND
+3.3V

Function: MC2 provides module input power.
JTAG, ground and ADC reference connections.
Source / changes: XEM8310 expansion connectors:
unused I/O marked NC; optional SYSMON parts removed.
https://docs.opalkelly.com/xem8310/expansion-connectors/
PWR flags mark external/module sources.

Mezzanine Connector 3

Function: J101–104 recording RX -> GTY224 ch0–3;
J105–108 recording RX -> GTY226 ch0–3.
Source / changes: Codex mapping: Opal Kelly XEM8310 Expansion Connectors / MC3; AMD UG583 Rev 1.29 PCB checklist.
https://docs.opalkelly.com/xem8310/expansion-connectors/
https://docs.amd.com/r/en-US/ug583-ultrascale-pcb-design/PCB-Design-Checklist
Paired frontend V1: C200/C201 = 100nF, DS181 Table 50:
V65 has none; line rate, frontend layout and operation unverified.
https://docs.amd.com/api/khub/documents/iAkxxTO496ANLiqYf2hgrQ/content

MC3
QTH-040-01-F-D-DP-A

P1_RXP
P1_RXN
P2_RXP
P2_RXN
P3_RXP
P3_RXN
P4_RXP
P4_RXN
MGT_REFCLK1P_225_C
MGT_REFCLK1N_225_C
MGT_RXP0_225
MGT_RXN0_225
MGT_RXP1_225
MGT_RXN1_225
MGT_RXP2_225
MGT_RXN2_225
MGT_RXP3_225
MGT_RXN3_225
GND
DGND
P5_RXP
P5_RXN
P6_RXP
P6_RXN
P7_RXP
P7_RXN
P8_RXP
P8_RXN
MGT_TXP0_225
MGT_TXN0_225
MGT_TXP1_225
MGT_TXN1_225
MGT_TXP2_225
MGT_TXN2_225
MGT_TXP3_225
MGT_TXN3_225
B67_T3U_N12
+1.2V_DDR

The supplied Bank 67 1.2V VCCO rail has a limited user capacity of 250mA. Care must be taken using this rail as any noise coupled into it could have effects on the behavioral performance of the DDR.

PCIE X4
File: PCIE.kicad_sch

PCIE
PCIe x4
GTY225

PCIE_SMCLK_VIO
PCIE_SMDAT_VIO
PCIE_PERST_B_VIO
PCIE_WAKE_B_VIO
VIO1
0
R2
+1.2V_DDR
PCIE_SMCLK_VIO
PCIE_SMDAT_VIO
PCIE_PERST_B_VIO
PCIE_WAKE_B_VIO
PCIE_VIO
PCIE_PERST_VIO

Connect the PERST VIO to either Bank 64 VIO1 or Bank 67 1.2V_DDR. Depending on which bank the signal is connected to.

Function: GTY224/226 external REFCLK0 pins are NC.
Source / changes: BRK8310 A01: Bulls Eye J1 removed.
XEM 225 onboard 125 MHz may feed adjacent GT quads:
AMD UG575 Fig. 1–80 and UG578 reference-clock routing.
GTY225 clock sharing and PCIe require Vivado validation.
https://docs.opalkelly.com/xem8310/clock-oscillators/
https://docs.amd.com/api/khub/documents/BY7rRWkUQIlMvNvosLhSZA/content

Power LEDs

+3.3V
R3
549
D1
DGND
+VDCIN
R4
2.0 k
D2
DGND

VREFP
R6
0
GNDADC

Function: R6 connects VREFP to GNDADC.
Source / changes: Inherited BRK8310 A01 SYSMON:
unused external reference and header removed.
https://docs.opalkelly.com/xem8310/

Test Points

+VDCIN TP1 +VDCIN
+3.3V TP2 +3.3V
+1.8V TP3 +1.8V
+1.2V_DDR TP4 +1.2V_DDR
VIO1 TP17 VIO1
VIO2 TP18 VIO2
VIO3 TP19 VIO3
DGND TP5 DGND
DGND TP6 DGND
DGND TP7 DGND
DGND TP8 DGND

B64_L20N 0 R9 PCIE_WAKE_B_VIO
B64_L17P 0 R10 PCIE_SMDAT_VIO
B64_L17N 0 R11 PCIE_SMCLK_VIO

Function: R9–R11 connect WAKE and SMBus to XEM.
Source / changes: BRK8310 A01 sheet 1: optional header removed.
https://pins.opalkelly.com/downloads/442/download?category_id=3

B67_T3U_N12 0 R7 PCIE_PERST_B_VIO

Function: R7 connects PCIe reset to XEM.
Source / changes: BRK8310 A01 sheet 1: R8 removed.
https://pins.opalkelly.com/downloads/442/download?category_id=3

Power Jack

+7.5 to +15 VDC

J4
PJ-102AH
DGND
C6
0.1 u
DGND
C5
220u
25V
DGND
+VDCIN

6-pin Mini-Fit
J5
0455580003
DGND

Fiduciales

FID1 FID2 FID3 FID4

Module Mounting Holes

MH1 MH2 MH3 MH4

KiCad import: harness connections normalized; Default variant
https://pins.opalkelly.com/downloads/442/download?category_id=3
Source: Opal Kelly BRK8310-A01, 19 May 2022, sheet 1/2

Sheet: /
File: BRK8310_Custom_V1.kicad_sch

Title: BRK8310 Custom Breakout V1

Size: C	Date:	Rev: V1
KiCad E.D.A. 10.0.6		Id: 1/4

Function: J6 provides PCIe x4 on GTY225.
Source / changes: BRK8310 A01 PCIE sheet:
lanes 4–7 and C21–C26, C29–C30 removed:
R28=0R selects the x4 PRSNT connection.
TI PCA9306 Rev O Fig 8–1: https://www.ti.com/lit/ds/symlink/pca9306.pdf
https://docs.opalkelly.com/xem8310/
brk8310-breakout-board/
REFCLK1/225 and PCIe boot need Vivado check.
Removed DNP R12/R16/R17/R20/R21/R22/R26:
R27/R29 removed; flags mark host / R2 / bias sources.
U2/U6: 200k bias only; not a supply rail; conditional AUX.
U5 OUT pin type; Diodes DS41186 Rev-2 p2: https://www.diodes.com/datasheet/download/AP22652_AP22653_AP22652A_AP22653A.pdf
C10/C28 0.1uF + 200k: ~20ms nominal; startup TBD.

PCIe x8 physical edge, x4 electrical

PCIE_VIOD
PCIE_SMDAT_VIO
PCIE_SMCLK_VIO
SMDAT_VIO
SMCLK_VIO
TP9
TP12
R14 4.75 k
R15 4.75 k
C9 0.1 u
U2 PCA9306DCUR
VREF1
VREF2
EN
SCL1
SCL2
SDA1
SDA2
GND
R13 200 k
C10 0.1 u
PCIE_SMDAT_3V3
PCIE_SMCLK_3V3
TP10
TP11
SMDAT_PCIE
SMCLK_PCIE
DGND

PCIE_PERST_VIO
PCIE_PERST_B_VIO
PERST_VIO
TP13
C11 0.1 u
U4 SN74AXC1T45DCK
Vcca
Vccb
A
B
DIR
GND
C12 0.1 u
+3.3V_PCIE_C
PCIE_PERST_B_3V3
TP14
PERST_PCIE

PCIE_WAKE_B_VIO
WAKE_VIO
TP15
R25 100 k
C27 0.1 u
U6 PCA9306DCUR
R23 200 k
C28 0.1 u
PCIE_WAKE_B_3V3
TP16
WAKE_PCIE

+3.3VAUX_PCIE
C31 0.1 u
U5 AP22653AW6-7
OUT
IN
FAULT
EN
ILIM
GND
+3.3VAUX_PCIE_C
C32 0.1 u
R18 100 k
TP21
FAULT
R24 100 k

Disable level shifters if either side is unpowered using the load switches to AND PCIE power and VIO power good. Disconnect VREF2 power to stop VREF2 to VREF1 leakage. Bringing EN low sets both sides of PCA9306 data pins to high impedance, isolating the data lines.

Load Switch Requirements
– Allow EN greater than VIN (when VIN is off)
– Have UVLO on VIN (2–3V)
– Active High Enable

+3.3V
R30 4.75 k
R31 4.75 k
VIO_PG
Q1A
Q1B
R32 100 k
R33 100 k

J6
PCIe x8 Card-Edge Connector
+12V_PCIE_C
+3.3V_PCIE_C
+3.3VAUX_PCIE_C
TP20
PWR_FLAG
REFCLK+
REFCLK–
PETp0
PETn0
PETp1
PETn1
PETp2
PETn2
PETp3
PETn3
PETp4
PETn4
PETp5
PETn5
PETp6
PETn6
PETp7
PETn7
PERp0
PERn0
PERp1
PERn1
PERp2
PERn2
PERp3
PERn3
PERp4
PERn4
PERp5
PERn5
PERp6
PERn6
PERp7
PERn7
PERST#
WAKE#
PRSNT1#
PRSNT2#
PRSNT2#
PRSNT2#
SMCLK
SMDAT
JTAG1_TRST#
JTAG2_TCK
JTAG3_TDI
JTAG4_TDO
JTAG5_TMS
PCIE_REFCLKP_C
PCIE_REFCLKN_C
C7 0.1 u
C8 0.1 u
MGT_REFCLK1P_225_C
MGT_REFCLK1N_225_C
PCIE_RX0P_C
PCIE_RX0N_C
C13 0.1 u
C14 0.1 u
MGT_TXP3_225
MGT_TXN3_225
PCIE_RX1P_C
PCIE_RX1N_C
C15 0.1 u
C16 0.1 u
MGT_TXP2_225
MGT_TXN2_225
PCIE_RX2P_C
PCIE_RX2N_C
C17 0.1 u
C18 0.1 u
MGT_TXP1_225
MGT_TXN1_225
PCIE_RX3P_C
PCIE_RX3N_C
C19 0.1 u
C20 0.1 u
MGT_TXP0_225
MGT_TXN0_225
PCIE_PERST_B_3V3
PCIE_WAKE_B_3V3
PCIE_PRSNT1_B
R28 0
PCIE_SMCLK_3V3
PCIE_SMDAT_3V3
MGT_RXP3_225
MGT_RXN3_225
MGT_RXP2_225
MGT_RXN2_225
MGT_RXP1_225
MGT_RXN1_225
MGT_RXP0_225
MGT_RXN0_225

KiCad import: harness connections normalized; Default variant
https://pins.opalkelly.com/downloads/442/download?category_id=3
Source: Opal Kelly BRK8310-A01, 19 May 2022, sheet 2/2

Sheet: /PCIE X4/
File: PCIE.kicad_sch
Title: BRK8310 Custom V1 – PCIe
Size: C
Date:
Rev: V1
KiCad E.D.A. 10.0.6
Id: 2/4

12 V TO 3.3 V FRONTEND SUPPLY — PROVISIONAL V1

LDO5 includes inductor. Rev set to separate from 40M 3.3 V. Layout, inrush, filtering and thermal checks remain open.

Function: Convert 40M +VDCIN into 4 separate 3.3 V rail for eight frontend boards.

Source / changes: TI TPS62933DRLR, Rev B (Fig 8-1 / Table 8-1). 3.3 V fixed-o.

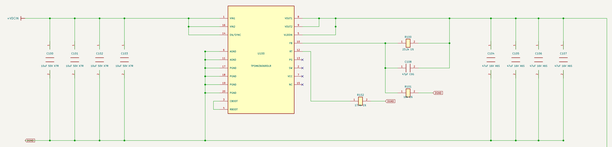
700 kHz and capacitor quantities adopted from TI EVM SLVUCE0 (Fig 4-1 / Table 8-1).

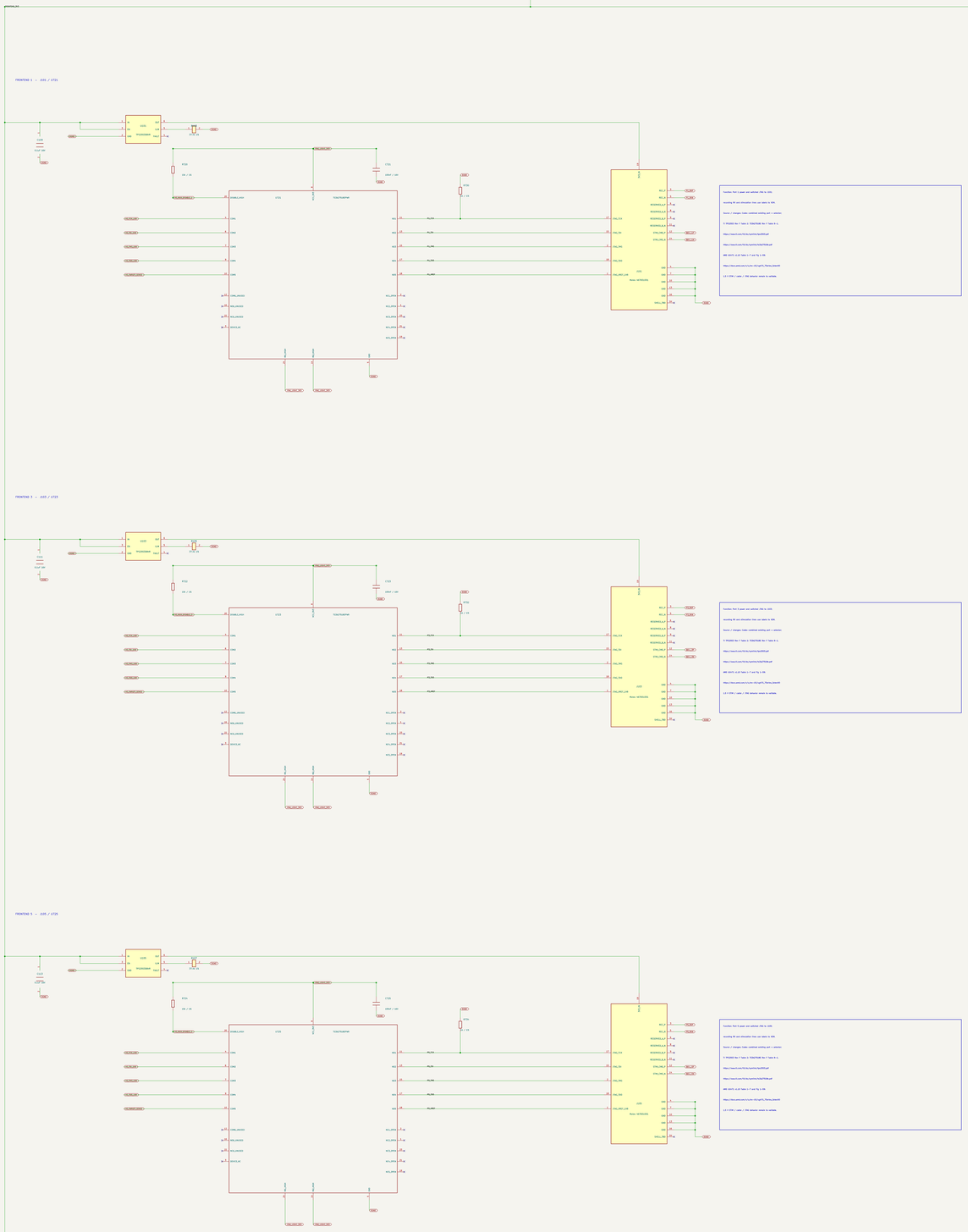
https://www.ti.com/lit/ds/symlink/tps62933.pdf

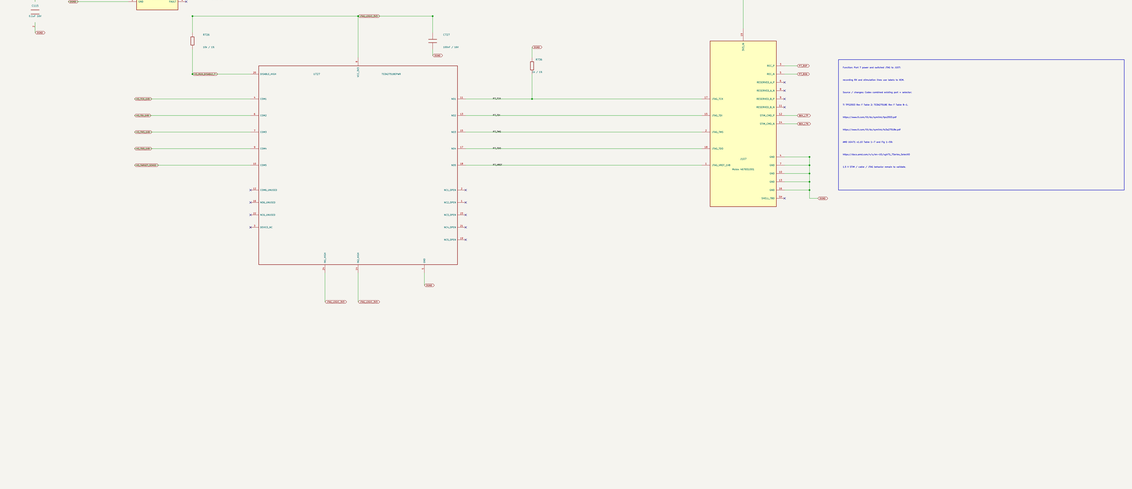
https://www.ti.com/lit/ug/slvuce0/slvuce0.pdf

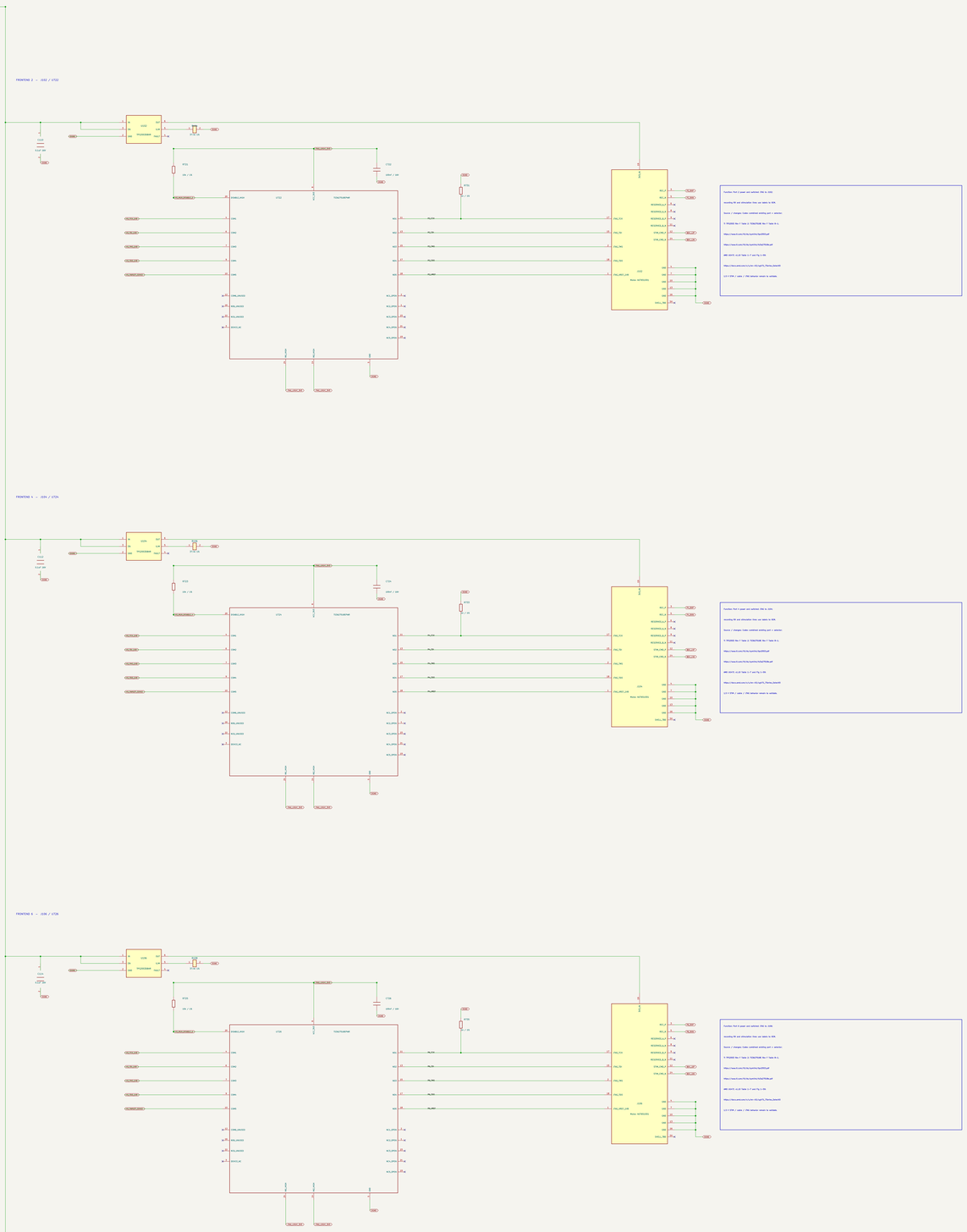
Variable: +vDUT effective 12VIT. Input filtering, startup and layout/thermal performance.

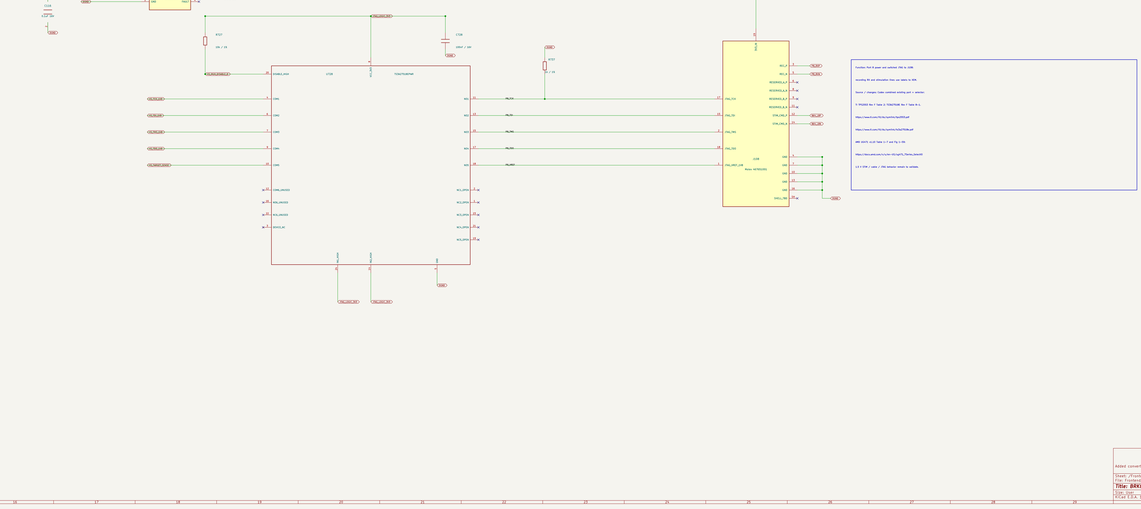
LDO5 7.1MM footprint: PG/PWP/R/RC spec 5A only; use WSRT standard thermal vias TBD.











Added converter and R parts; not qualified for fabrication

Front-ofboard parts and sheet

Title: BRK8310 Custom V1 — frontend power

Size: A1	Date: 2026-05-17	Rev: V1
KiCad 8.0.4, LDO5		Sh: 3/3

USB TO JTAG PROGRAMMER

1B SHARED HEADSTAGE JTAG / SEPARATE XEM + EIGHT SWITCHED PORTS

USB JTAG: SHARED EIGHT-HEADSTAGE INTERFACE + SEPARATE XEM — V1

USB JTAG ENABLE / OFF

SHARED EIGHT-HEADSTAGE JTAG — V1 / ONE HOT, TARGET SENSE, LOCAL 1.8V

USB HOST TCK / TDI / TMS / TDO

P001 — HDMI310 / 1.8 V JTAG

USB JTAG: SHARED EIGHT-HEADSTAGE INTERFACE + SEPARATE XEM — V1

Candidate, unpowered targets, USB enumeration and wiring not qualified

Issue: „USB JTAG not working"

Title: **„USB JTAG programmer and target selector — V1**

Rev: V1